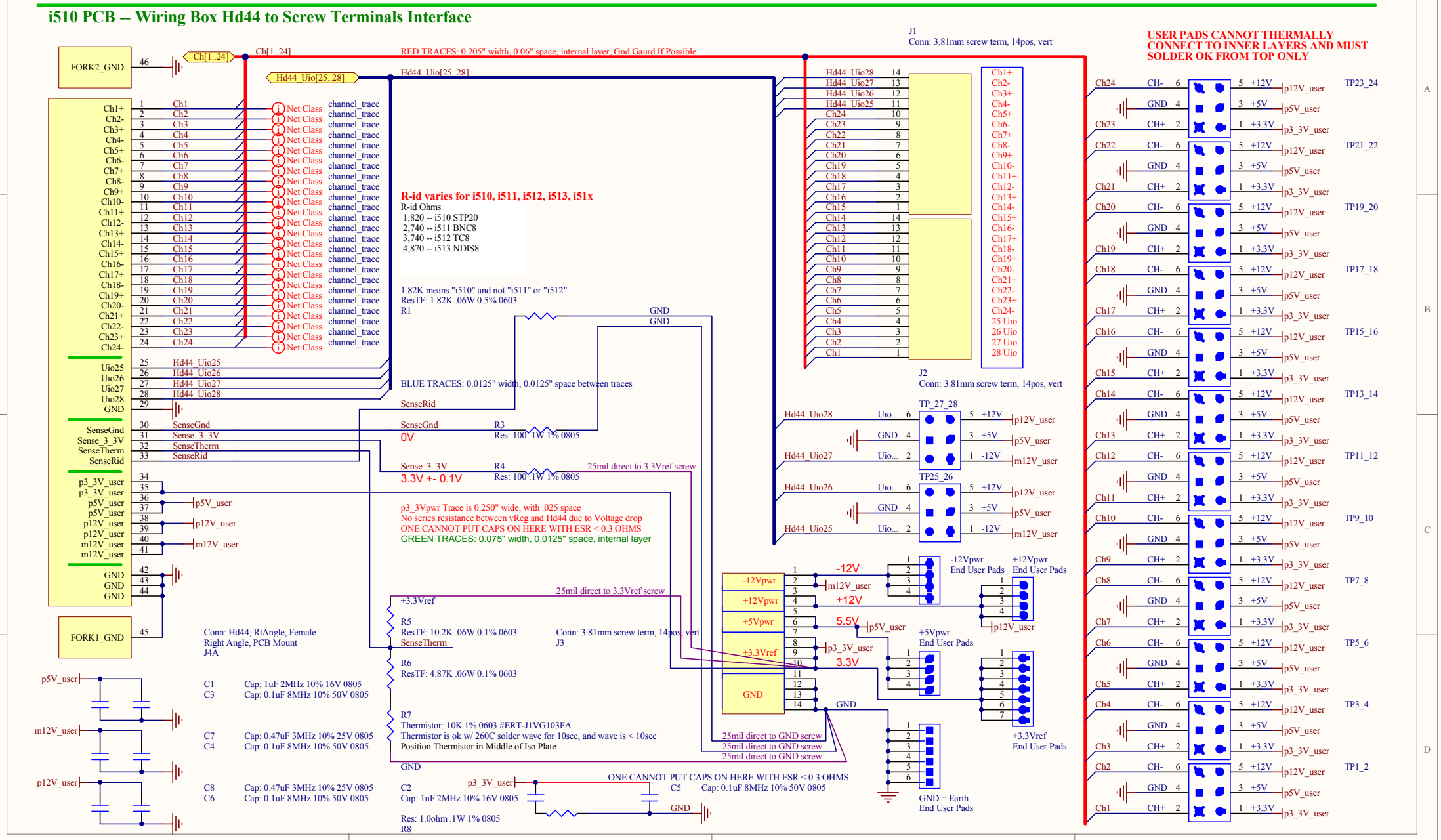i510 PCB -- Wiring Box Hd44 to Screw Terminals Interface